cora

6412

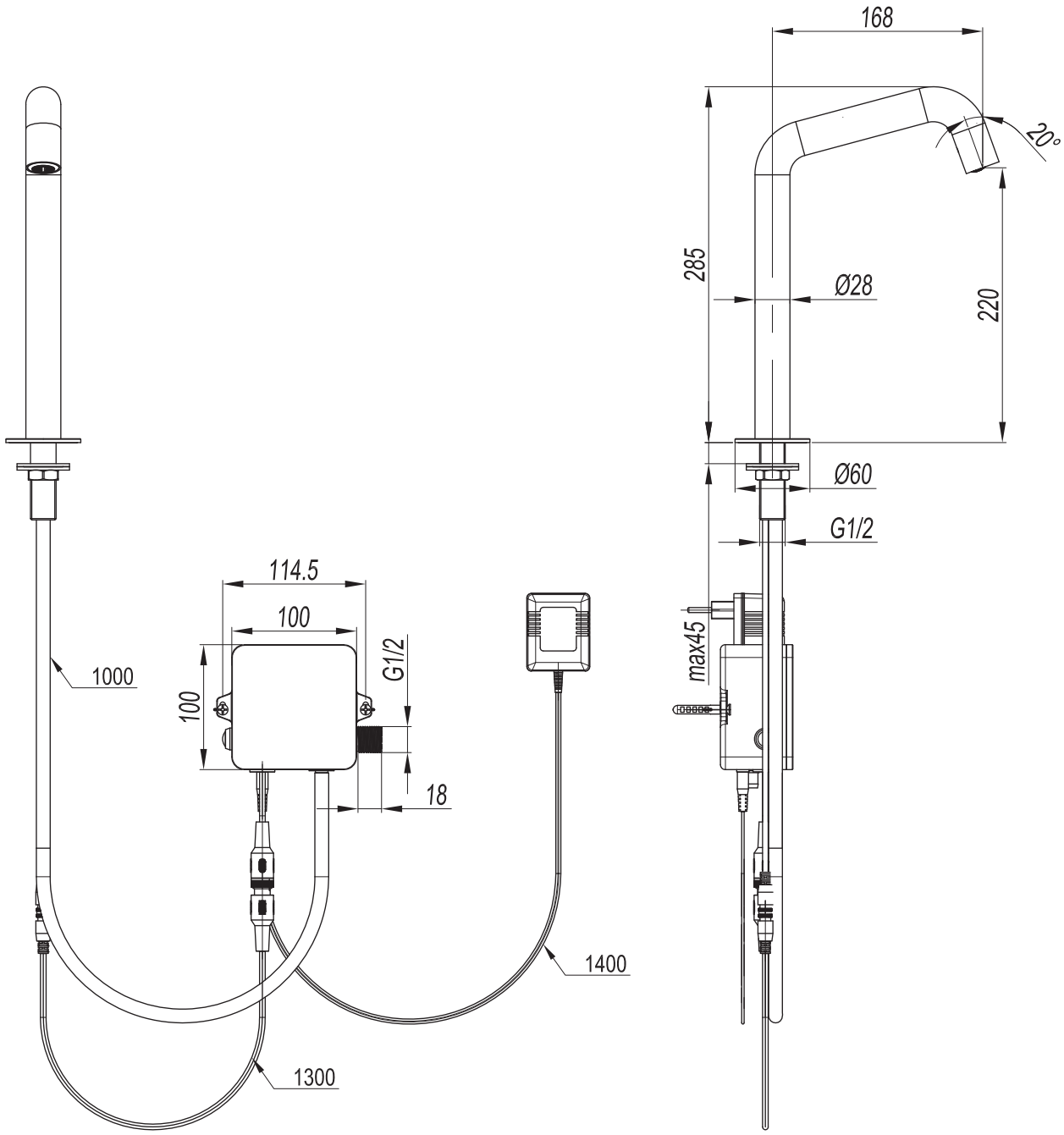
168
20°
285
Ø28
220
Ø60
G1/2
max45
114.5
100
100
G1/2
18
1000
1400
1300