TIGER

Product Datasheet



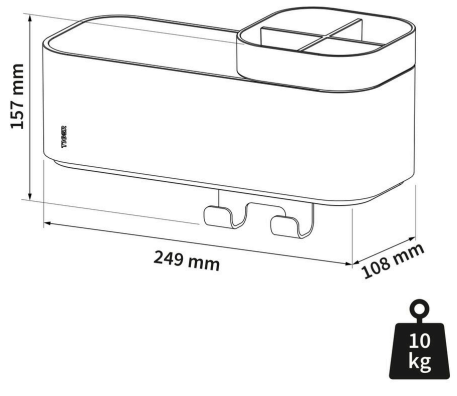

Tiger 2-Store Storage tray with towel hook and toothbrush holder 25 cm Black

Item number:	800374	**Center to center distance (mm):**	110
Serie:	2-Store		
Color name:	Black	**TigerFix:**	TigerFix 1
Finishing:	Coating, Matt	**Weight limit (kg):**	10
Material:	ABS, Silicone rubber (SR), Stainless steel	**Concealed fixing:**	Yes
		Removable:	Yes
Mounting type:	Wall mounting, TigerFix - Adhesive, Screws	**Draining slot:**	Yes
Mounting set included:	Yes		
Guarantee (years):	10		
GTIN:	8720553726494		

Product properties

- Multifunctional: the tray is easy to keep clean thanks to its removable insert
- Practical: this basket is convenient for the washbasin but can also be used in the shower
- Tailored to your needs: the insert is suitable for your toothbrush but also for a razor
- Everything has been carefully thought of: this basket includes a hook for your towel
- Easy to use: the products stand upright in the rack thanks to the stabilisation at the back
- Easy to mount: with our life hack TigerFix your accessory will hang in no time. TigerFix is available separately
- Sustainable in use: made of high-quality ABS

At Tiger, we are passionate about inspiring consumers to create their perfect bathroom. We have many years of experience and are dedicated to the design, development and production of unique high-quality bathroom accessories. Accessories that are thoughtfully designed, easy to install and affordable for everyone.

Coram reserves the right to change product specification

CORAM
Coram, Hogeweg 87-93, 5301 LK, Zaltbommel, The Netherlands
info@coram.eu

www.tiger.nl

- Easy to clean: thanks to the drainage slots, no water remains in the tray

At Tiger, we are passionate about inspiring consumers to create their perfect bathroom. We have many years of experience and are dedicated to the design, development and production of unique high-quality bathroom accessories. Accessories that are thoughtfully designed, easy to install and affordable for everyone.

Coram reserves the right to change product specification

CORAM
Coram, Hogeweg 87-93, 5301 LK, Zaltbommel, The Netherlands
info@coram.eu